BENQ SW272U/SW272Q
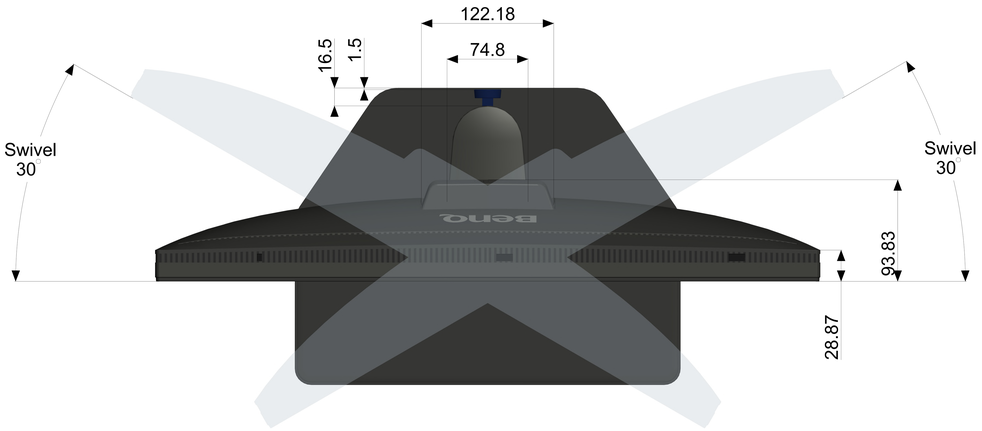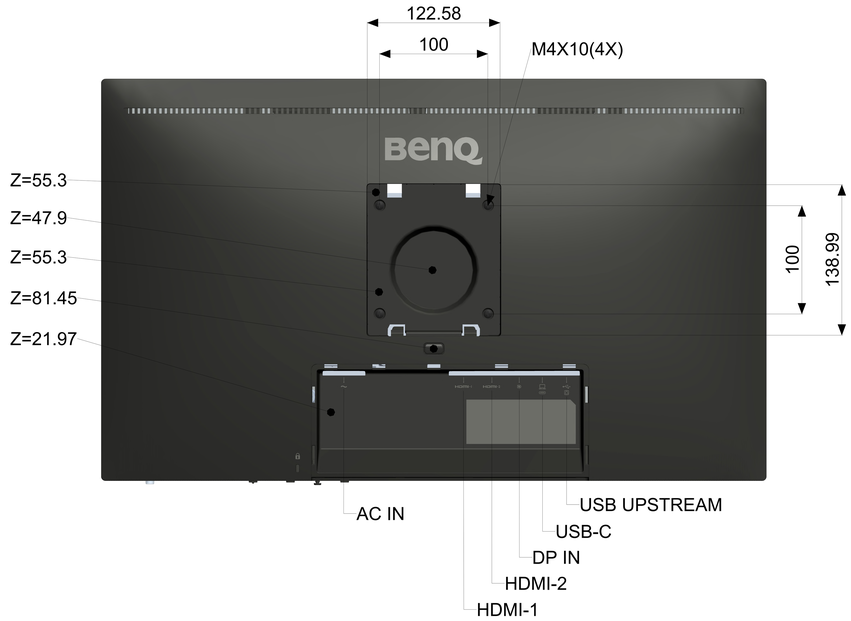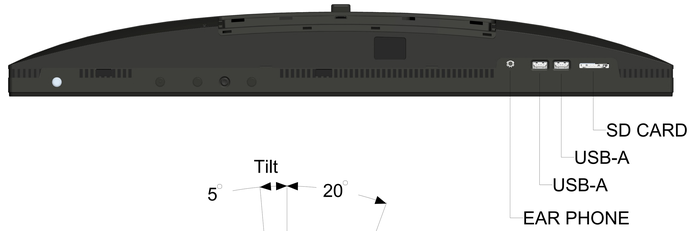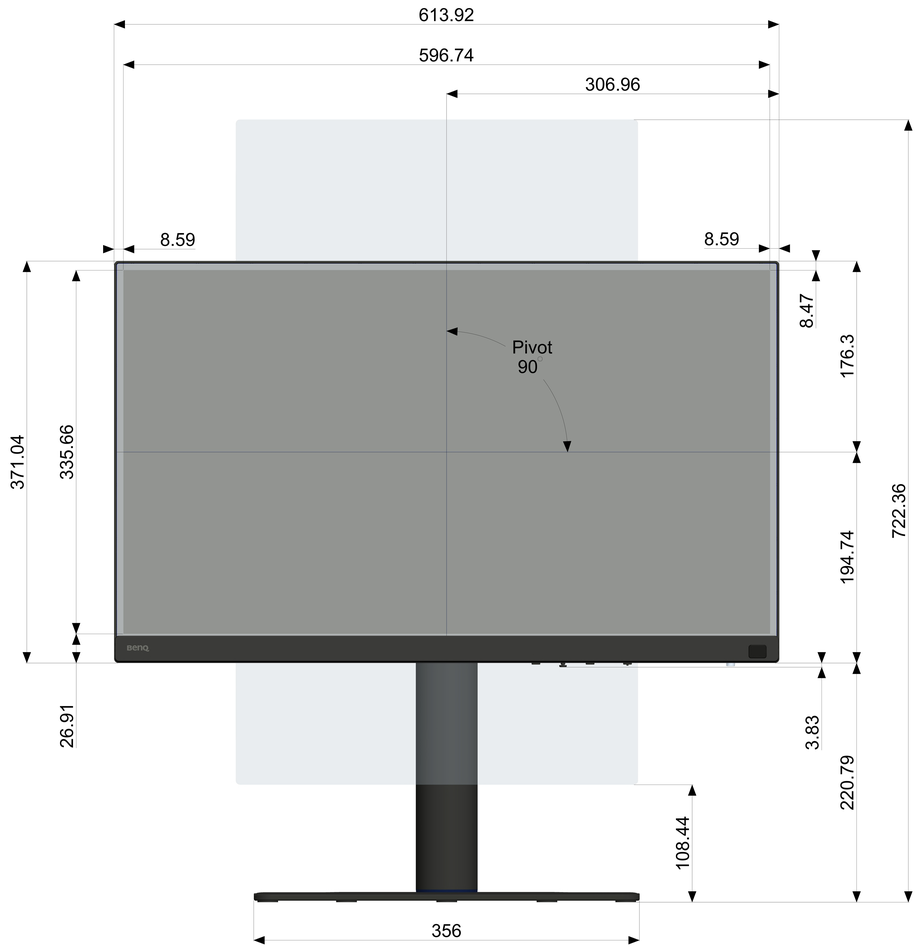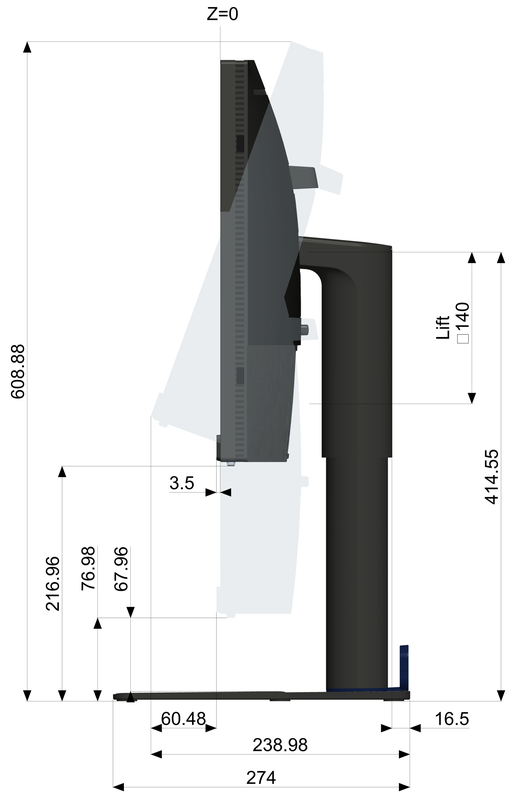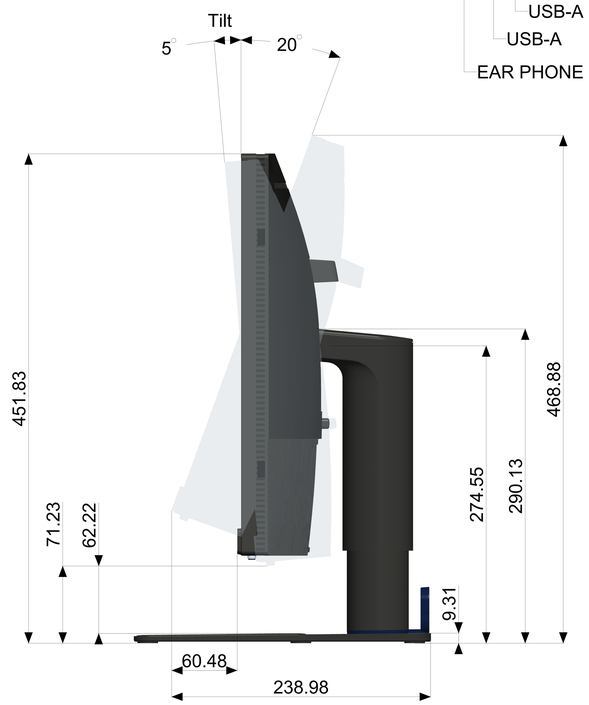
Unit: mm
Dimension: Norminal
Drawing: Not to Scale